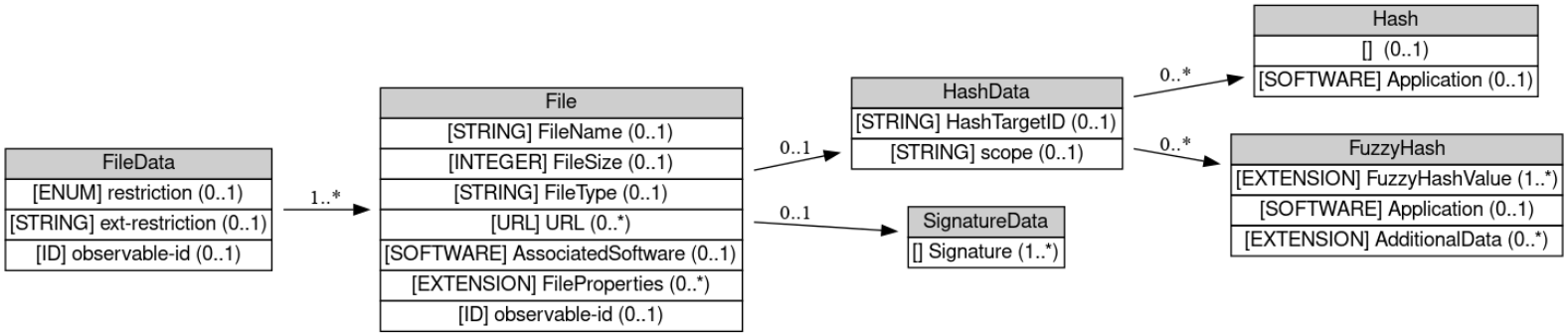IODEFv2 : FileData